BS

自扣紧封闭压铆螺母柱 SELF-CLINCHING BLIND FASTENERS

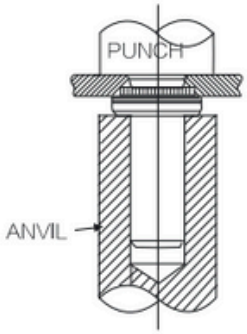

Part Number Designation

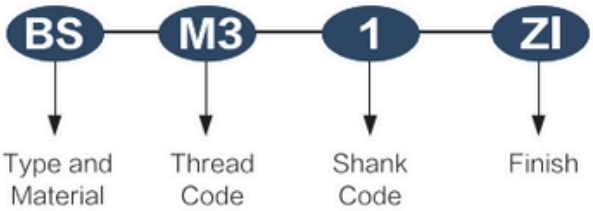

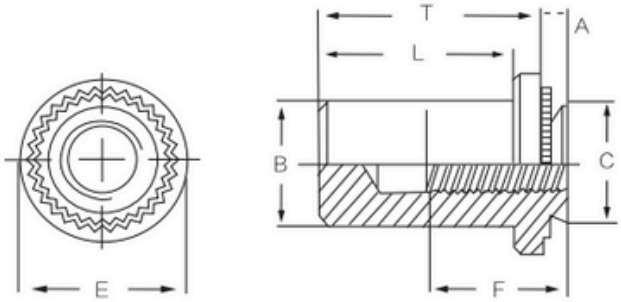

All dimensions are in inches(Size Unit:inch)

	Thread Size	Type: Steel	Type: Stainless Steel	Thread Code	Shank Code	A (Shank) Max.	Min.Sheet Thickness	Hole Size IN Sheet +.003	B MAX.	C MAX.	E ±0.01	F Min.	L MAX.	T ±0.01	Min.Dist Hole C/L To Edge
UNIFIED	.112-40(#4-40)	B	BS	440	1	.038	.040	.166	.150	.165	.250	.210	.335	.380	.19
					2	.054	.056								
	.138-32(#6-32)	B	BS	632	1	.038	.040	.1875	.169	.187	.280	.230	.335	.380	.22
					2	.054	.056								
	.164-32(#8-32)	B	BS	832	1	.038	.040	.213	.204	.212	.310	.280	.385	.440	.27
					2	.054	.056								
	.190-32(#10-32)	B	BS	032	1	.038	.040	.250	.235	.249	.340	.280	.385	.440	.28
					2	.054	.056								
	.250-20(1/4-20)	B	BS	0420	1	.054	.056	.344	.305	.343	.430	.310	.500	.560	.34
					2	.087	.090								

All dimensions are in millimeters(Size Unit:mm)

	Thread Size	Type: Steel	Type: Stainless Steel	Thread Code	Shank Code	A (Shank) Max.	Min.Sheet Thickness	Hole Size IN Sheet +0.08	B MAX.	C MAX.	E ±0.25	F Min.	L MAX.	T ±0.25	Min.Dist Hole C/L To Edge
METRIC	M3X0.5	B	BS	M3	1	0.97	1	4.25	3.84	4.22	6.35	5.3	8.5	9.6	4.8
					2	1.38	1.4								
	M4X0.7	B	BS	M4	1	0.97	1	5.4	5.2	5.38	7.95	7.1	9.8	11.2	6.9
					2	1.38	1.4								
	M5X0.8	B	BS	M5	1	0.97	1	6.4	6.02	6.38	8.75	7.1	9.8	11.2	7.1
					2	1.38	1.4								
	M6X1.0	B	BS	M6	1	1.38	1.4	8.75	7.8	8.72	11.1	7.8	12.7	14.3	8.6
					2	2.21	2.3								